Part Number:FTOP260PC-6G

Electronical Specifications

Voltage Rating:	250Vr.m.s.max
Frequency Range:	DC TO 6 Ghz
Nominal Impedance:	50 Ohm
Temperature Rating:	-40℃ to +85℃
Insulation Resistance:	500Mohm min.
V.S.W.R:	1.20max(DC～3GHz) 1.60max(3～6GHz)
Insertion Loss:	0.40dB max(DC～3GHz) 0.85dBmax(3～6GHz)
Withstanding Voltage:	AC300V+/-20V
Installtion Hole Size:	7.00mm[.276]
Max Stroke:	3.00mm[.118]
Duralbility:	10000 cycles

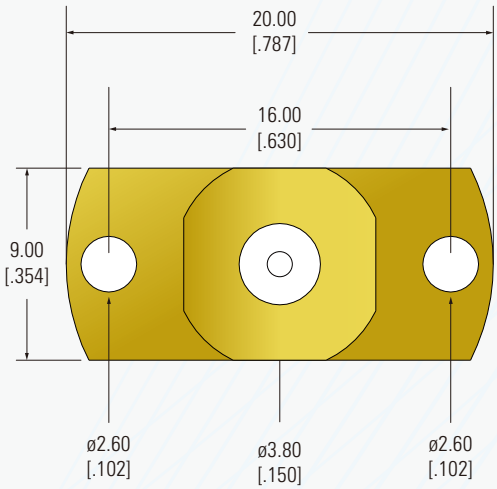

Applications

Connector Test
MM8030-2600
MM8030-2610
MS-180

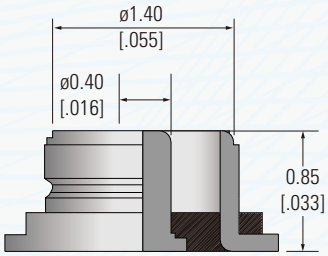

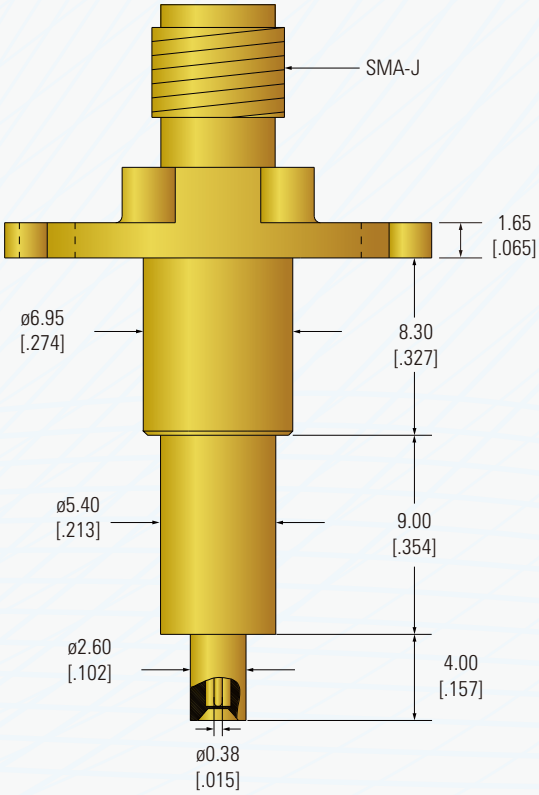

Probe mm.[inch]